DH-HAC-HFW1200B

2Megapixel 1080P Water-proof HDCVI IR-Bullet Camera

Features

- 1/2.7" 2Megapixel CMOS
- 25/30fps@1080P
- High speed, long distance real-time transmission
- Day/Night(ICR), AWB, AGC, BLC, 2D-DNR
- 6mm fixed lens (3.6mm, 8mm optional)
- Max. IR LEDs length 50m, Smart IR
- IP67, DC12V

DH-HAC-HFW1200B

Technical Specifications

Model	DH-HAC-HFW1200BP	DH-HAC-HFW1200BN
Camera		
Image Sensor	1/2.7" 2Megapixel CMOS	
Effective Pixels	1930(H)×1088(V)	
Electronic Shutter	1/50s~1/100,000s	1/60s~1/100,000s
Video Frame Rate	25fps@1080P	30fps@1080P
Synchronization	Internal	
Min. Illumination	0.01Lux@F1.2(AGC ON), 0Lux IR on	
Video Output	1-channel BNC HDCVI high definition video output	
Camera Features		
Max. IR LEDs Length	50m, Smart IR	
Day/Night	Auto(ICR) / Color / B/W	
Noise Reduction	2D	
Lens		
Focal length	6mm (3.6mm, 8mm optional)	
Angle of View	H: 59.4° (89.9° /41.4°)	
Mount Type	M12	
General		
Power Supply	DC12V±20%	
Power Consumption	Max 4.5W	
Working Environment	-30°C~+60°C / Less than 95%RH (no condensation)	
Transmission Distance	Over 500m via 75-3 coaxial cable	
Ingress Protection	IP67	
Dimensions(W×D×H)	241.8mm×90.2mm×83.7mm	
Weight	0.64kg	
Material	Metal (front) + Plastic (body)	

DH-HAC-HFW1200B

Dimensions (mm)

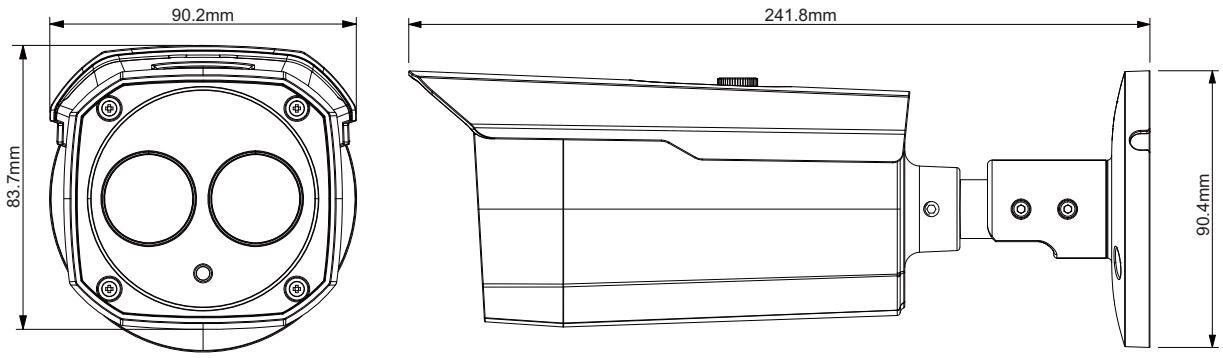

Accessories (optional)

PFA122	PFA152

Dahua Technology Co., Ltd.
1187 BinAn Road, Binjiang District, Hangzhou, China
Tel: +86-571-87688883
Fax: +86-571-87688815
Email:overseas@dahuatech.com
www.dahuasecurity.com

*Design and specifications are subject to change without notice.

© 2013 Dahua Technology Co., Ltd.