DHI-ITARD-024SA

Narrow Wave Radar

Order Information

DHI-ITARD-024SA

Features

- Support two-way speed measuring, High measure accuracy
- Support high speed/ low speed detection, with wide speed range
- Narrow wave plate antenna design
- Working parameters can be set flexible, with high sensitivity

Technical Specifications

Model	**ITARD-024SA**
Measure Range	10km/h ～250km/h
Lane	Support 1 lane
Radar distance	≥60m
Measure Accuracy	±1 km/h
Vibration Frequency	24.125GHz
Reaction Time	≤33ms
Power Supply	DC10.5V~14.5V
Rated voltage	DC12V+ / AC24V
Rated Current	＜400mA
Transmission power	7dBm
Power Consumption	<4.5mW
Antenna lobe Angle	Level 5 degrees (3 dB), vertical 7 degrees (3 dB)
Operating Environment	Temperature-30°C~+70°C, humidity10%~90%
Hardware interface	1 RS232
communication mode	serial port protocol
Dimension	179*147*45.9 mm(W×D×H)
Weight	1.4Kg

DHI-ITARD-024SA

Dimensions (mm)

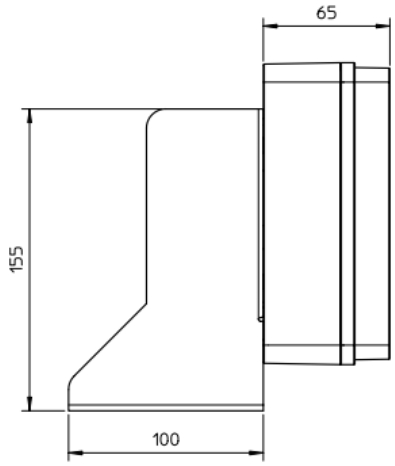

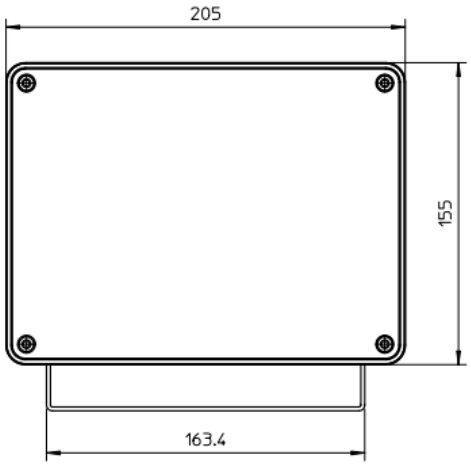

Dahua Technology Co., Ltd.
1199 BinAn Road, Binjiang District, Hangzhou, China
Tel: +86-571-87688883
Fax: +86-571-87688815
Email:overseas@dahuatech.com
www.dahuatech.com

*Design and specifications are subject to change without notice.

© 2015 Dahua Technology Co., Ltd.